PREVENTIVE MAINTENANCE ON THE M203 GRENADE LAUNCHER

TEC LESSON NO. 551-101-8362-A

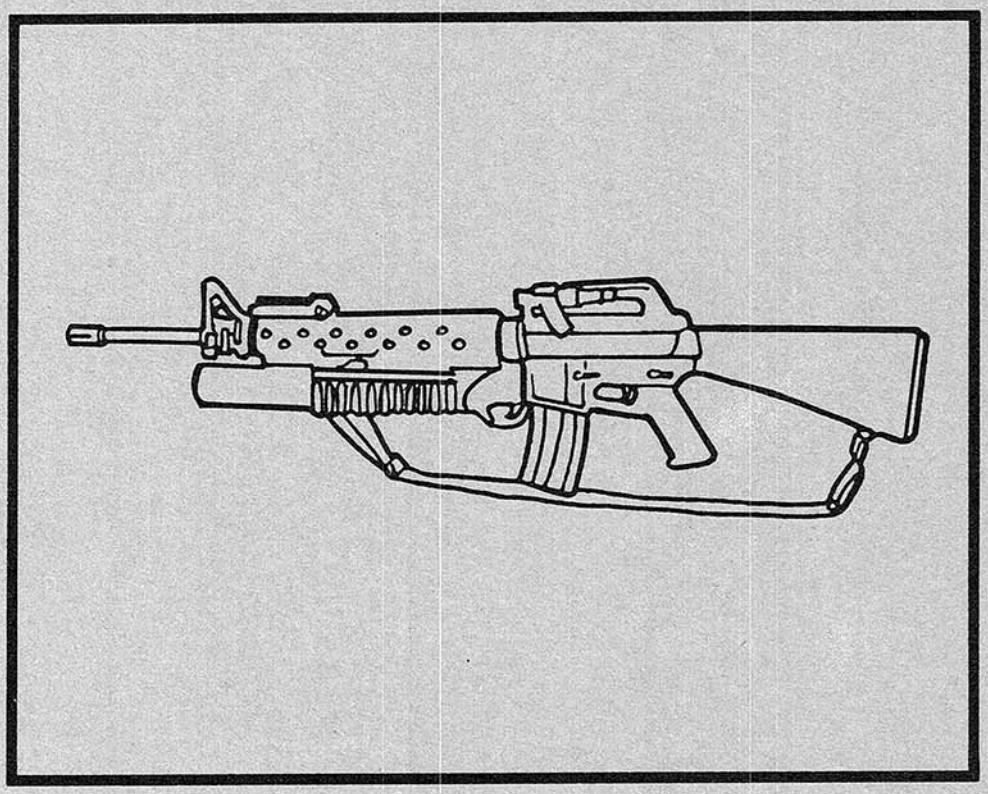

PRODUCED BY
US ARMY QUARTERMASTER
SCHOOL
FORT LEE, VIRGINIA

January 1982

Student/Supervisor Instructions and Pretest/Posttest are contained within this Lesson

Digitized by:
SMALL ARMS OF THE WORLD
SMALLARMSOFTHEWORLD.COM

2898

READ THE STUDENT/SUPERVISOR INSTRUCTIONS CAREFULLY.
BE SURE YOU UNDERSTAND THEM BEFORE CONTINUING THE LESSON.

When used in this publication, "he," "him," "his," and "men" represent both the masculine and feminine genders unless otherwise stated.

January 1982

STUDENT/SUPERVISOR INSTRUCTIONS

AUDIENCE

- MOS 76Y
- Skill levels 1 and 2

TRAINING OBJECTIVE

Given the equipment and materials required, the soldier will be able to:

- Perform preventive maintenance on the M203 grenade launcher.

MATERIAL/EQUIPMENT/PERSONNEL REQUIRED TO COMPLETE THIS LESSON

- Pen or pencil
- Lesson booklet
- M16A1 rifle with M203 grenade launcher attached
- Armorer tool kit
- Cleaning and lubricating materials and supplies
- One dummy shell casing
- One label
- GTA No. 10-8-3, M203 Layout Chart
- Preventive Maintenance Job Aid No. 551-101-8362-J
- TM 9-1010-221-24
- DA Form 2404
- DA Form 2407

TIME REQUIRED

- Soldier must complete the task within 30 minutes

REFERENCES

- TM 9-1010-221-24

STUDENT INSTRUCTIONS

- Before taking this lesson, complete TEC Lesson No. 551-101-8361-A, "Troubleshooting the M203 Grenade Launcher."

- Take the pretest. If you pass the pretest, you need not take this lesson.

- Insure that you have all material, equipment, or personnel required to complete this lesson.

- Read this lesson. Practice each step in the lesson until you can do it without looking at the book.

- Take the posttest. If you do not pass, read the lesson again and repeat the test.

- It is very important that you read every step in this lesson. Do not skip around and do the steps out of order. You could hurt yourself or harm the equipment. Do not do anything that is not explained in the lesson booklet, and observe all safety warnings. Safety warnings are printed in red. These are cautions or warnings you must observe so that you do not injure yourself or harm the equipment.

- Keep track of all dummy rounds. Keep them locked in your tool kit or some other location separate from live ammunition.

- Always clear any weapon before you work on it.

- Read all CAUTIONS printed in red BEFORE doing the next step.

- Be extra careful when working with springs that can fly out. Wear safety goggles.

- Do not write on this lesson booklet.

SUPERVISOR INSTRUCTIONS

- Insure that the student has completed the prerequisites listed above.

- Insure that the student has all material, equipment, or personnel required to complete this lesson.

- This lesson is self-teaching and self-paced. The soldier will learn the task by reading and doing the steps in the lesson. He can use as much time as needed, within reasonable limits, to learn the task.

- As a supervisor, you should be familiar with the lesson material so you can answer questions, score tests, and insure that all safety precautions and warnings are followed.

- Although this is a self-teaching program, it may be necessary for you to assist the soldier if he has difficulties. Everything the soldier needs to know to pass the test is in this booklet. When a soldier does not understand a step, it is usually because he is going too fast and skips a step. Reading the section again will often solve the problem. Occasionally, a soldier will not understand the whole lesson. If you are familiar with the weapon, you may explain the steps; or, if you will read the lesson yourself, you should be able to explain it to the soldier. If the weapon becomes jammed or is disassembled beyond organizational level, and neither you nor the soldier can remedy the problem, take it to direct support maintenance for repair.

- Allow the student to read the lesson and practice the task before testing.

- Follow set-up and scoring instructions for the test.

- Do not aid the soldier in taking the test.

- Observe the soldier's performance in the pretest/posttest.

- Score each performance measure as GO/NO GO.

- Be sure the soldier completes the task within the required time limit.

CORRESPONDING JOB PERFORMANCE AID ATTACHED

(Next page intentionally left blank.)

PRETEST/POSTTEST

Type of Lesson: Quartermaster

TEC Lesson No.
551-101-8362-A

Preventive Maintenance on the M203 Grenade Launcher

General Information

This pretest/posttest covers preventive maintenance checks and services on the M203 grenade launcher. In order to pass the test, the student must receive a GO on 9 of the 10 performance measures and must complete the test within 30 minutes. If he fails the test, the lesson must be repeated and the test retaken. The following items must be arranged on a table for the soldier's use during the test:

Paper
Pen or pencil
M16A1 rifle with M203 grenade launcher attached
Preventive Maintenance Job Aid No. 551-101-8362-J
TM 9-1010-221-24

The scorer must have a watch, a pen or pencil, paper, and the answers to pretest/posttest located on the last page of this lesson.

Test Instructions:

Read each question and write the correct answer(s) on a separate sheet of paper. You may use the TM and preventive maintenance job aid during the test. You will have 30 minutes to complete this test.

NOTE TO SUPERVISOR/SCORER:

Please review the supervisor instructions at the beginning of this lesson and the information printed above. Be sure that all of the items listed above are available for use during the test. Read aloud the test instructions to the soldier, and begin timing his performance. Do not let the soldier continue past the time limit. On a separate sheet of paper, write GO or NO GO for each of the following ten questions. The correct answers are on the last page of this lesson.

DO NOT WRITE ON THIS TEST.

Write the correct answer(s) on a separate sheet of paper.

	GO	NO GO
1. You have a launcher with a missing machine screw. What should you do? a. Evacuate sight leaf to Direct Support b. Replace the machine screw c. Repair sight leaf	____	____
2. If you have a launcher with a broken sight leaf, what should you do? a. Replace the sight leaf b. Evacuate the launcher to Direct Support c. Repair sight leaf	____	____
3. A launcher with oil in the bore and chamber should be: a. Evacuated to Direct Support b. Replaced with a different weapon c. Cleaned	____	____

	GO	NO GO
4. You have a launcher with a handguard that looks like this. What should you do?		

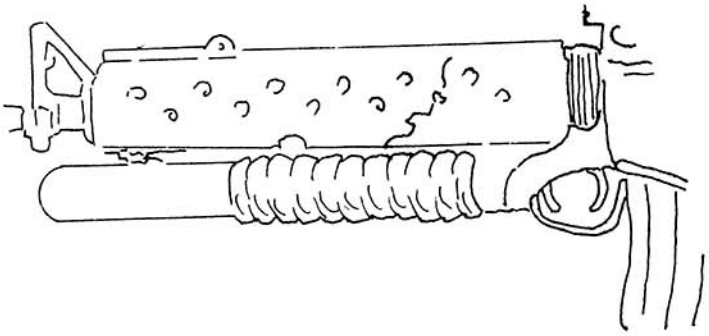

a. Evacuate the launcher to Direct Support b. Replace the handguard c. Repair the handguard	____	____
5. A launcher with a missing lock washer requires that you:		
a. Replace the washer b. Evacuate the sight leaf to Direct Support c. Evacuate the weapon to Direct Support	____	____
6. When you check the barrel stop, and any part is damaged or missing, what should you do?		
a. Replace the barrel stop b. Clean and lubricate the weapon c. Evacuate the weapon to Direct Support	____	____
7. You are brought a weapon with a broken ejector. What should you do?		
a. Evacuate the weapon to Direct Support b. Replace the ejector c. Assemble the weapon without it	____	____
8. You have a launcher with a broken extractor. What should you do?		
a. Replace the extractor b. Evacuate the weapon to Direct Support c. Repair it	____ ____	____ ____

M203 GRENADE LAUNCHER

	GO	NO GO
9. In order to clean and lubricate the follower, you must:		
a. Remove the barrel b. Remove sight leaf assembly c. Remove back plate	____	____
10. The first step before you do preventive maintenance checks is to:		
a. Clear the weapon b. Disassemble the weapon c. Fill out DA Form 2404	____	____

PREVENTIVE MAINTENANCE ON THE M203 GRENADE LAUNCHER

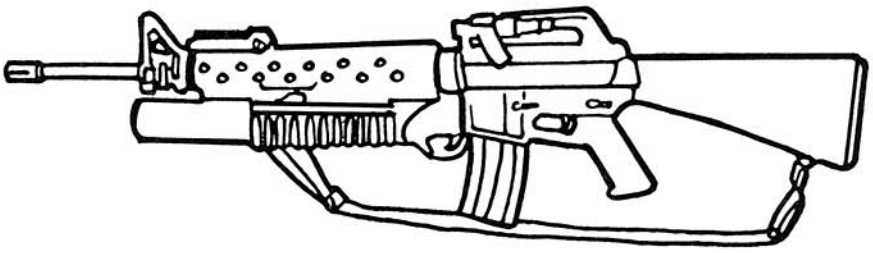

The M16A1 Rifle with Grenade Launcher Attached

INTRODUCTION:

This is TEC Lesson No. 551-101-8362-A, "Preventive Maintenance on the M203 Grenade Launcher." This lesson will show you how to do preventive maintenance checks and services on the M203 grenade launcher. Preventive maintenance is the inspection, care and cleaning of a weapon to preserve its condition and appearance. How often preventive maintenance is done depends on your unit SOP.

EQUIPMENT/MATERIALS REQUIRED:

Items listed in Student/Supervisor Instructions on page i of this lesson.

HOW TO DO PREVENTIVE MAINTENANCE CHECKS AND SERVICES ON THE M203 GRENADE LAUNCHER

STEP 1. Clear the M203 grenade launcher.

STEP 2. Hand function the launcher using a shell casing. If the M203 grenade launcher will not hand function, troubleshoot it. If you don't remember how to troubleshoot, go back to TEC Lesson No. 551-101-8361-A, "Troubleshooting the M203 Grenade Launcher."

STEP 3. Check the general appearance of the M203.

STEP 4. Do the safety check on the M203.

STEP 5. Disassemble the M203.

STEP 6. Be sure all parts are clean and properly lubricated.

STEP 7. If any of these parts are broken or missing, replace them and order new parts:

Machine screw	Quadrant sight group
Lock washer	Quadrant sight clamp
Sight leaf	Sight post
Sight leaf base screws	Special screw
Barrel assembly	* Steel safety wire
Back plate	Tubular rivet
Follower	Handguard

If any other parts are broken/missing, send the weapon to Direct Support.

*Check with your Direct Support for authority to replace broken wires. If authorized, refer to the steps to replace steel safety wire on pages 4 through 9.

STEP 8. If any of these parts are loose, tighten them:

Check for Tightness	If Part Cannot be Tightened
Grenade launcher attached to M16A1 rifle	Evacuate to Direct Support
Handgrip	Evacuate to Direct Support
Handguard	Replace
Screws on sight leaf base	Replace
Machine screw on sight leaf	Replace

STEP 9. Reassemble and hand function the M203 grenade launcher.

STEP 10. Clear the M203 grenade launcher and fill out DA Form 2404 to show any corrective actions taken.

DO NOT DO THIS

STEPS TO REPLACE STEEL SAFETY WIRE

NOTE: You must replace the steel safety wire only when you are brought a weapon with a broken wire.

DO NOT remove the wire under normal conditions.

STEP 1: Cut the broken wire from front of receiver assembly.

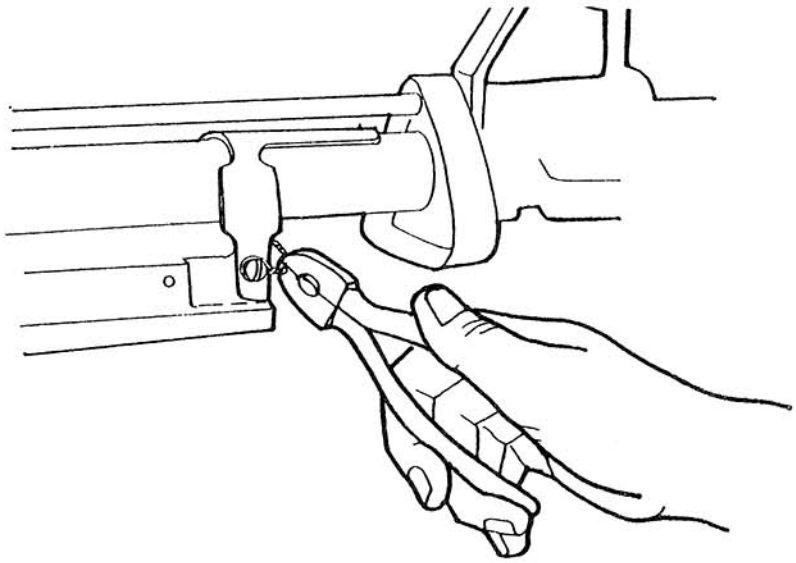

STEP 2: Untwist the wire and pull it completely off the mounting screws.

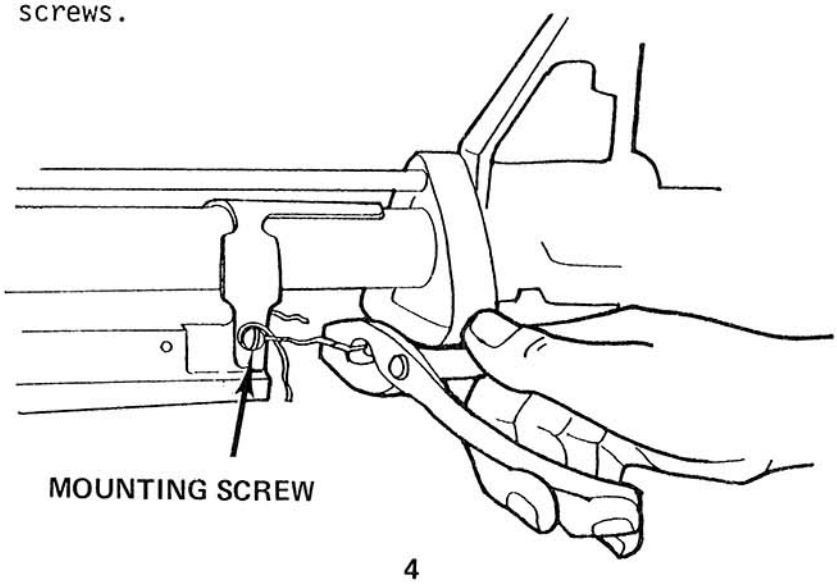

STEP 3: Put a 5"piece of steel safety wire half way through the mounting screw.

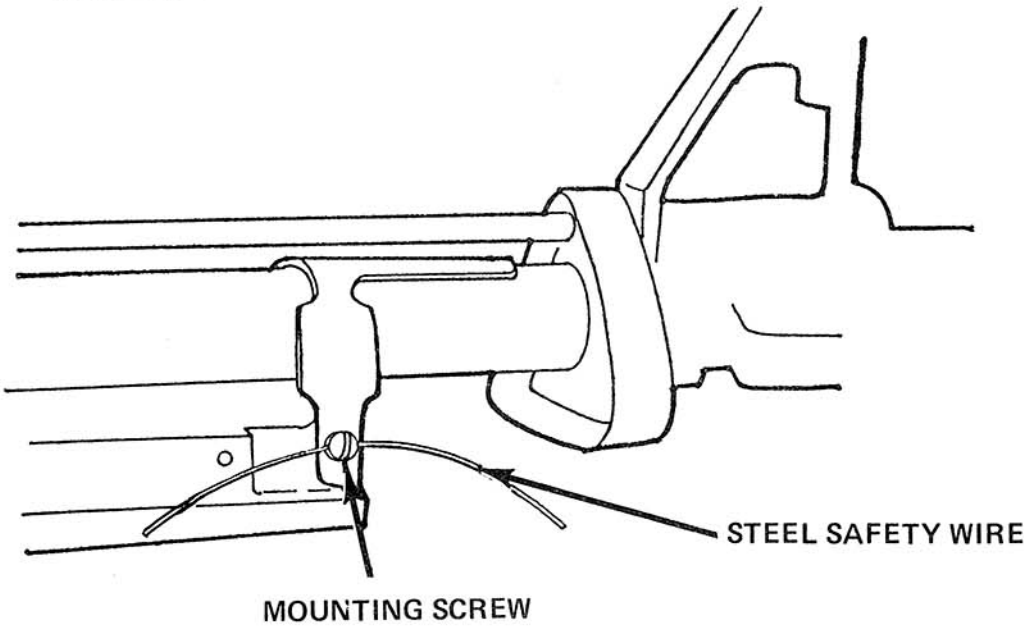

STEP 4: Wrap the wire around the top of the mounting screw.

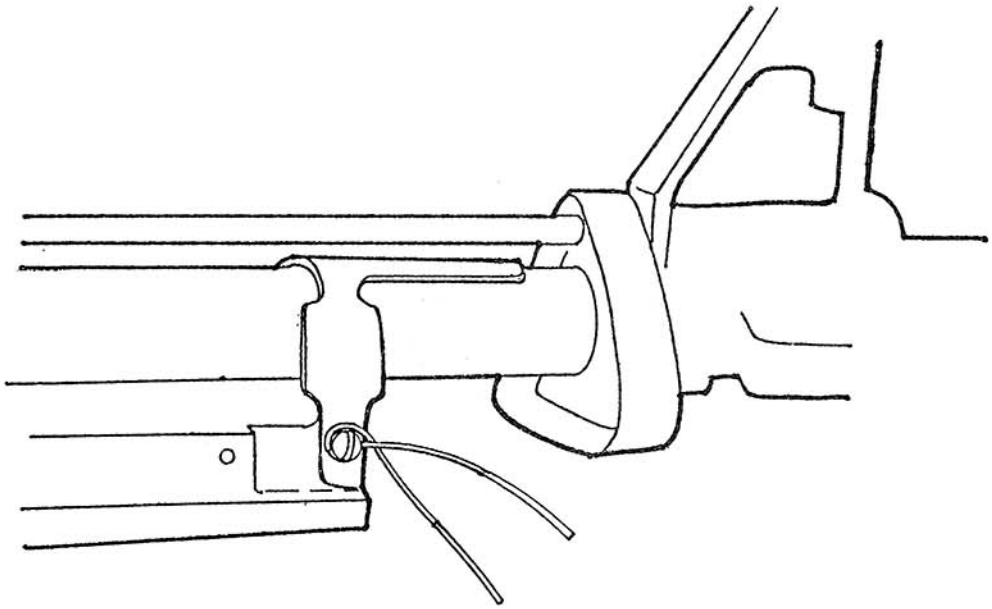

STEP 5: Grip wire with wire twister pliers, as shown.

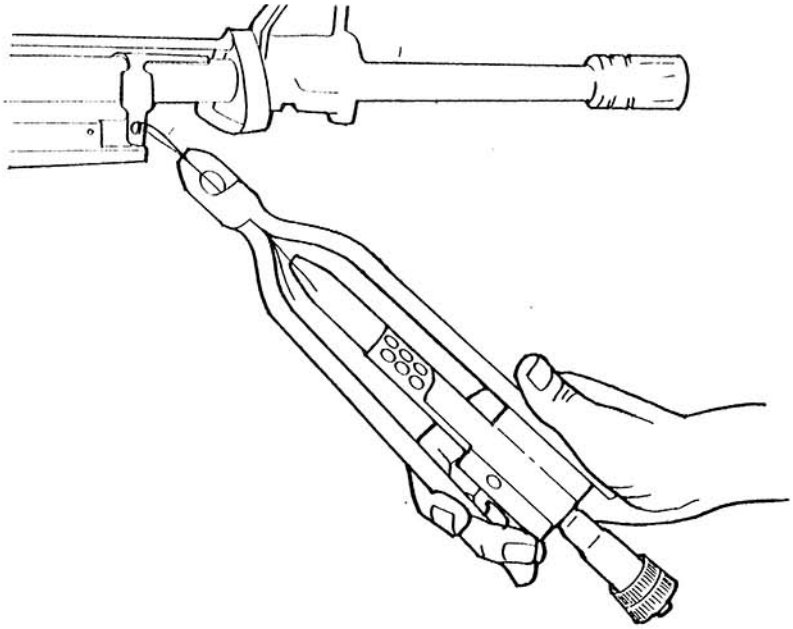

STEP 6: Close handle of wire twister pliers and pull lock down.

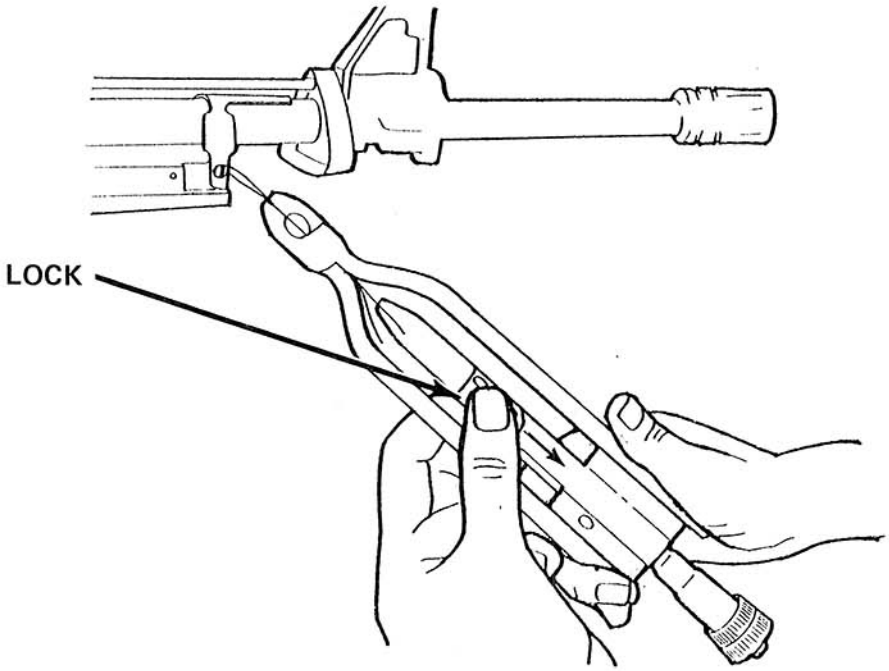

STEP 7: Hold the pliers by the metal cap only. Pull the cap towards you all the way. The pliers will spin.

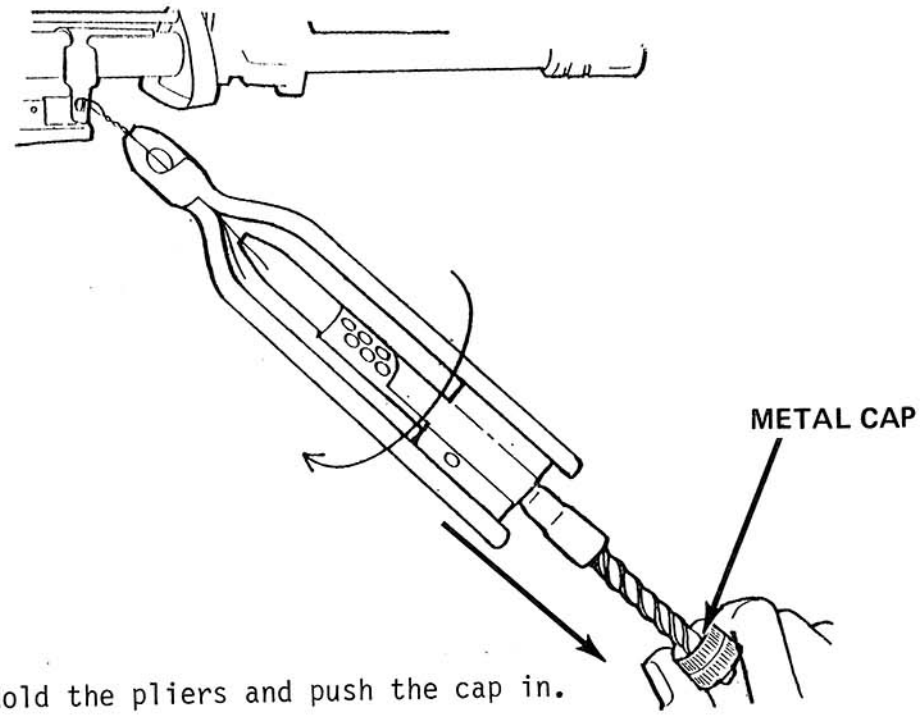

STEP 8: Hold the pliers and push the cap in.

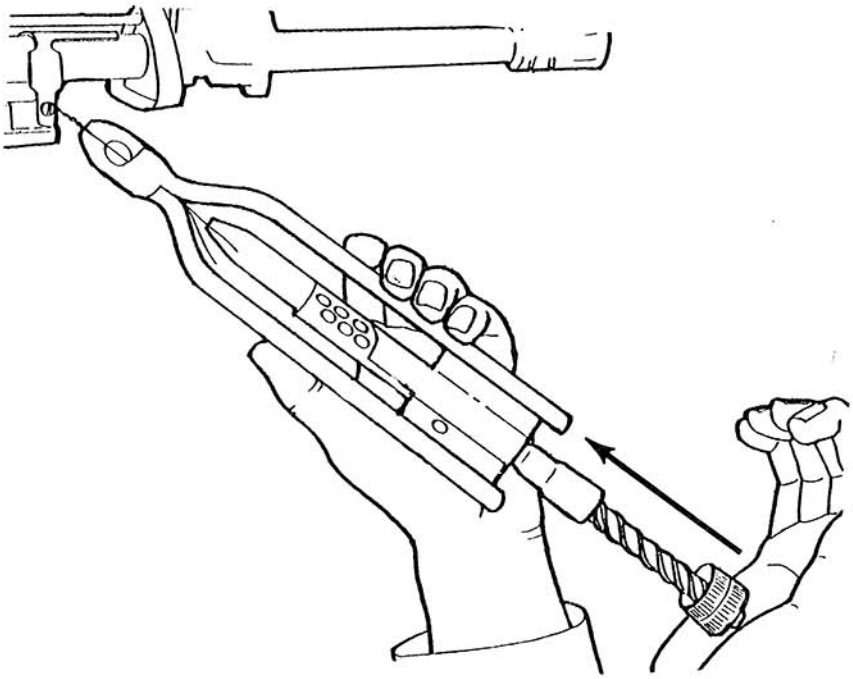

STEP 9: Repeat Steps 7 and 8 until wire is twisted 1 and 1/4 inches long.

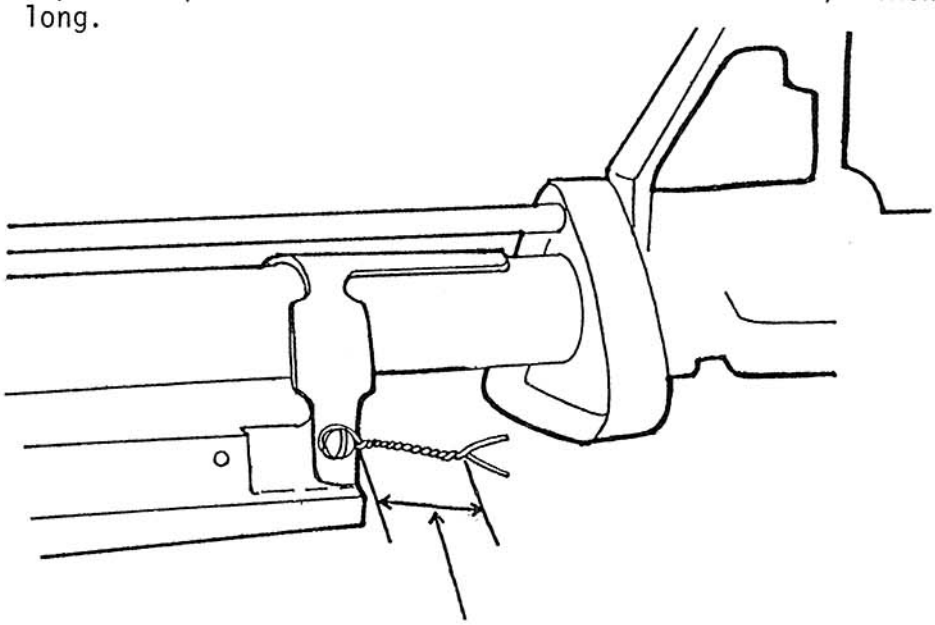

STEP 10: Wrap the wire around the front of the receiver assembly. Put one end of wire into mounting screw and other around the <u>bottom</u> of it as shown.

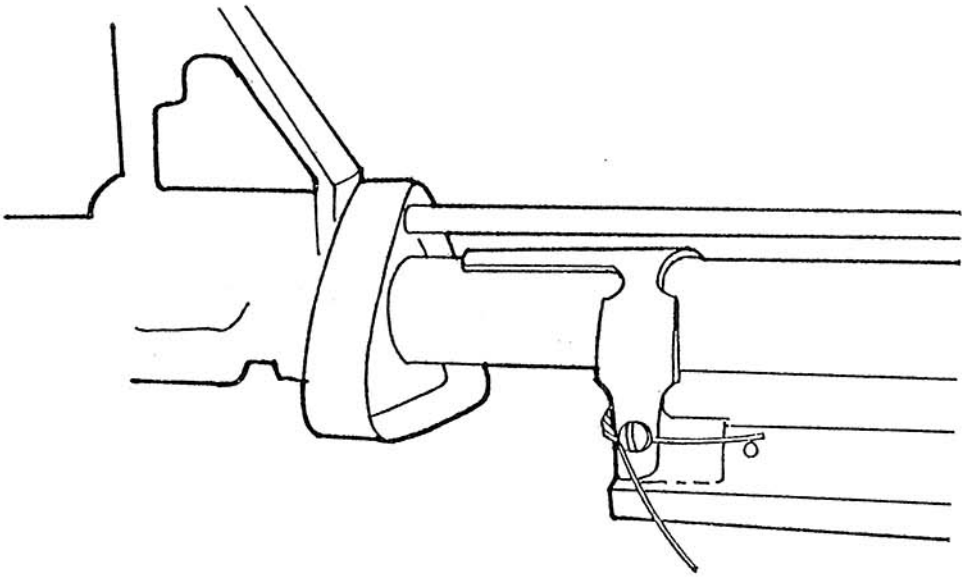

STEP 11: Use the pliers to twist the wire strands 1/2 inch.

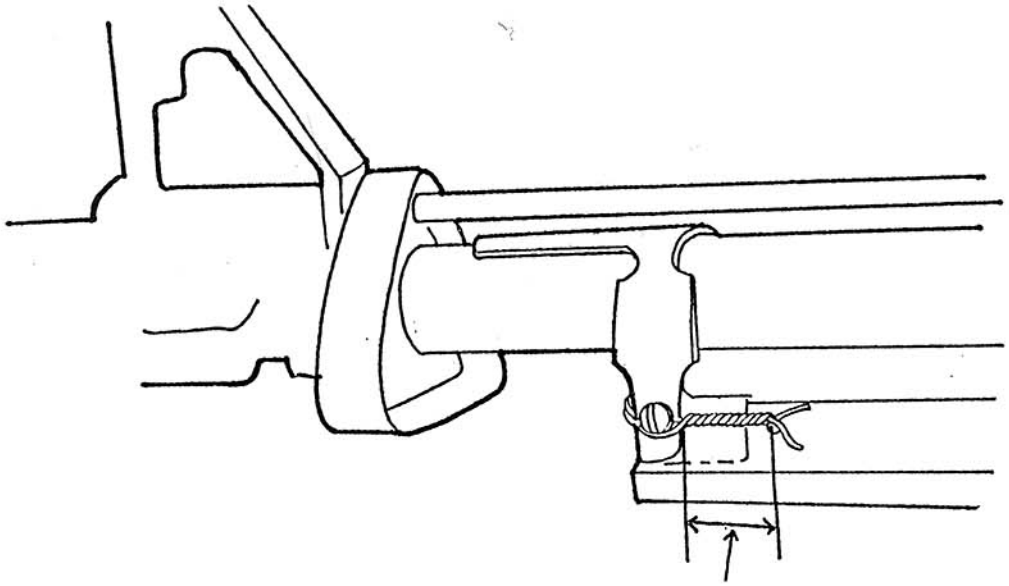

STEP 12: Cut off excess wire and tuck it out of way as shown.

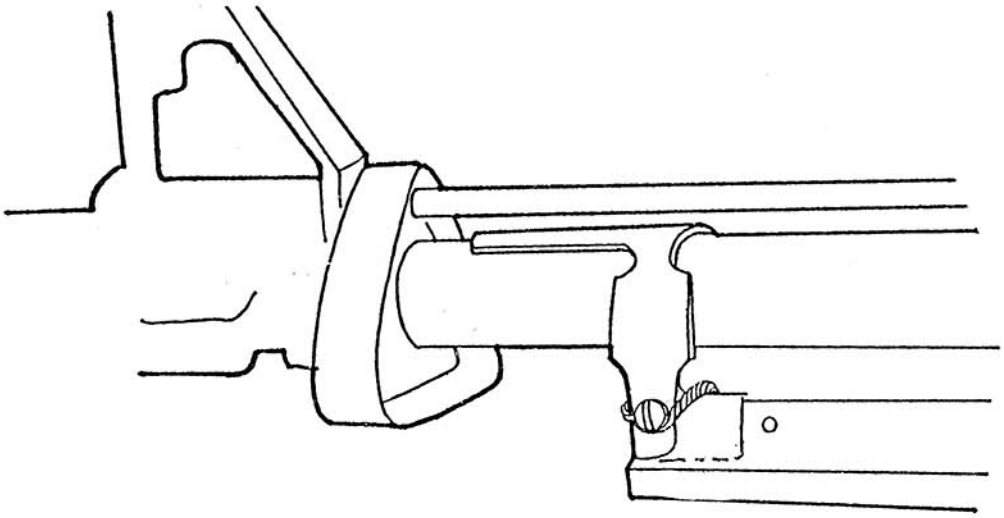

SELF-EVALUATION

Write the correct answer(s) on a separate sheet of paper.

DO NOT WRITE ON THIS SELF-EVALUATION.

1. What is the first thing you do when you are doing a preventive maintenance check on the M203 launcher?

   a. Disassemble the launcher
   b. Hand function the launcher
   c. Clear the launcher

2. Exposed metal surfaces should be lubricated with:

   a. PSL
   b. LAW
   c. LSA

3. Excess oil in the breech insert will cause:

   a. Leakage
   b. Failure of the launcher to fire
   c. Jamming of the M16A1 rifle

4. If you cannot read the markings on the sight leaf, you should:

   a. Evacuate the weapon to Direct Support
   b. Replace the sight leaf
   c. Clean and lubricate

5. If excess oil is in the bore and chamber, you should:

   a. Evacuate the launcher to Direct Support
   b. Clean the bore and chamber
   c. Replace the barrel

6. If <u>any</u> parts of the launcher are dirty, you should:

   a. Turn them in
   b. Send the weapon to Direct Support
   c. Clean and lubricate them

7. Which of the following parts can you replace? (More than one answer.)

   a. Trigger assembly
   b. Extractor
   c. Tubular rivet
   d. Sight leaf base screws

8. To keep the weapon in good condition, you should:

   a. Perform maintenance checks regularly
   b. Use it as often as possible
   c. Clean it with SD

9. Once the weapon is cleaned, scratched surfaces should be:

   a. Touched up with solid film lubricant
   b. Disregarded
   c. Cleaned again

10. The following parts should be sent to Direct Support. (More than one answer.)

   a. Barrel stop
   b. Trigger assembly
   c. Handguard
   d. Machine screw
   e. Lock washer

Correct answers are on the next page.

ANSWERS TO SELF-EVALUATION

1. c, clear the launcher
2. c, LSA
3. b, failure of the launcher to fire
4. b, replace the sight leaf
5. b, clean the bore and chamber
6. c, clean and lubricate them
7. c, tubular rivet
   d, sight leaf base screws
8. a, performance maintenance checks regularly
9. a, touched up with solid film lubricant
10. a, barrel stop
    b, trigger assembly

WHEN YOU HAVE COMPLETED THE SELF-EVALUATION, ASK YOUR SUPERVISOR TO GIVE YOU THE POSTTEST.

PRETEST/POSTTEST

ANSWER SHEET

Preventive Maintenance on the M203 Grenade Launcher

1. b
2. a
3. c
4. b
5. a
6. c
7. a
8. b
9. c
10. a

JOB AID

PREVENTIVE MAINTENANCE ON THE M203 GRENADE LAUNCHER

JOB AID NO. 551-101-8362-J

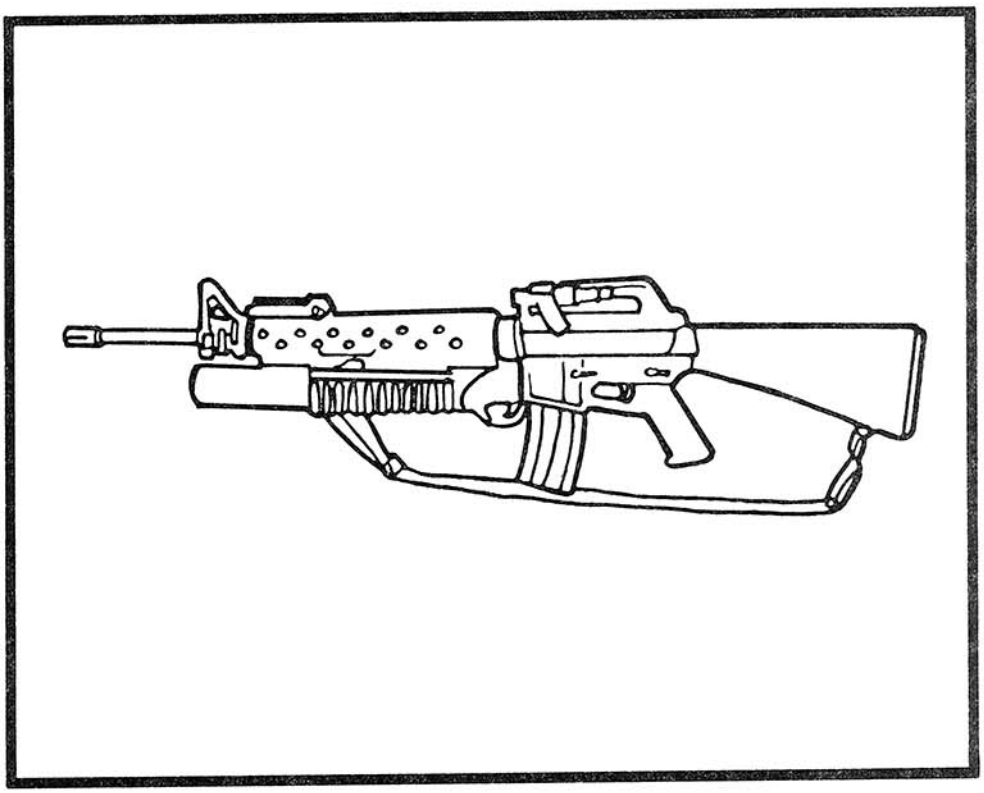

PRODUCED BY
US ARMY QUARTERMASTER
SCHOOL
FORT LEE, VIRGINIA

January 1982

When used in this publication, "he," "him," "his," and "men" represent both the masculine and feminine genders unless otherwise stated.

INTRODUCTION

This is Job Aid No. 551-101-8362-J, "Preventive Maintenance on the M203 Grenade Launcher." This job aid lists the steps to follow when performing preventive maintenance checks and services on the M203 grenade launcher.

You must have this job aid to do TEC Lesson No. 551-101-8362-A. You should also use this booklet as a reference to help you with other TEC lessons and when you must perform these tasks in your job.

(Next page intentionally left blank.)

PREVENTIVE MAINTENANCE JOB AID

To correctly perform preventive maintenance checks and services on the M203 grenade launcher, you must do each of the following:

STEP 1. Clear the launcher.

STEP 2. Check the overall condition of the launcher.

STEP 3. Hand function.

STEP 4. Clean and lubricate dirty parts.

STEP 5. Check for broken or missing parts. Replace any of the following parts:

- Machine screw
- Lock washer
- Sight leaf
- Sight leaf base screws
- Handguard
- Barrel assembly
- Backplate
- Follower
- Quadrant sight group
- Quadrant sight clamp
- Sight post
- Special screw
- * Steel safety wire
- Tubular rivet

*See page 2 in TEC Lesson No. 551-101-8362-A

STEP 6. Check the following parts for tightness. Replace or evacuate to Direct Support as necessary.

- Grenade launcher
- Handgrip
- Handguard
- Sight leaf base screws
- Machine screw
- Special screw

STEP 7. Reassemble and clear the launcher.

STEP 8. Fill out DA Form 2404 to show corrective actions taken. Fill out DA Form 2407 if weapon must be sent to Direct Support.

U.S. Government Printing Office: 1982- 541-624/31 Region No. 3-11

Army-Fort Lee, VA-8475-82-200-C

*U.S. GOVERNMENT PRINTING OFFICE: 1982--542-730/583

Army-Fort Lee, VA-11999-82-7005-C